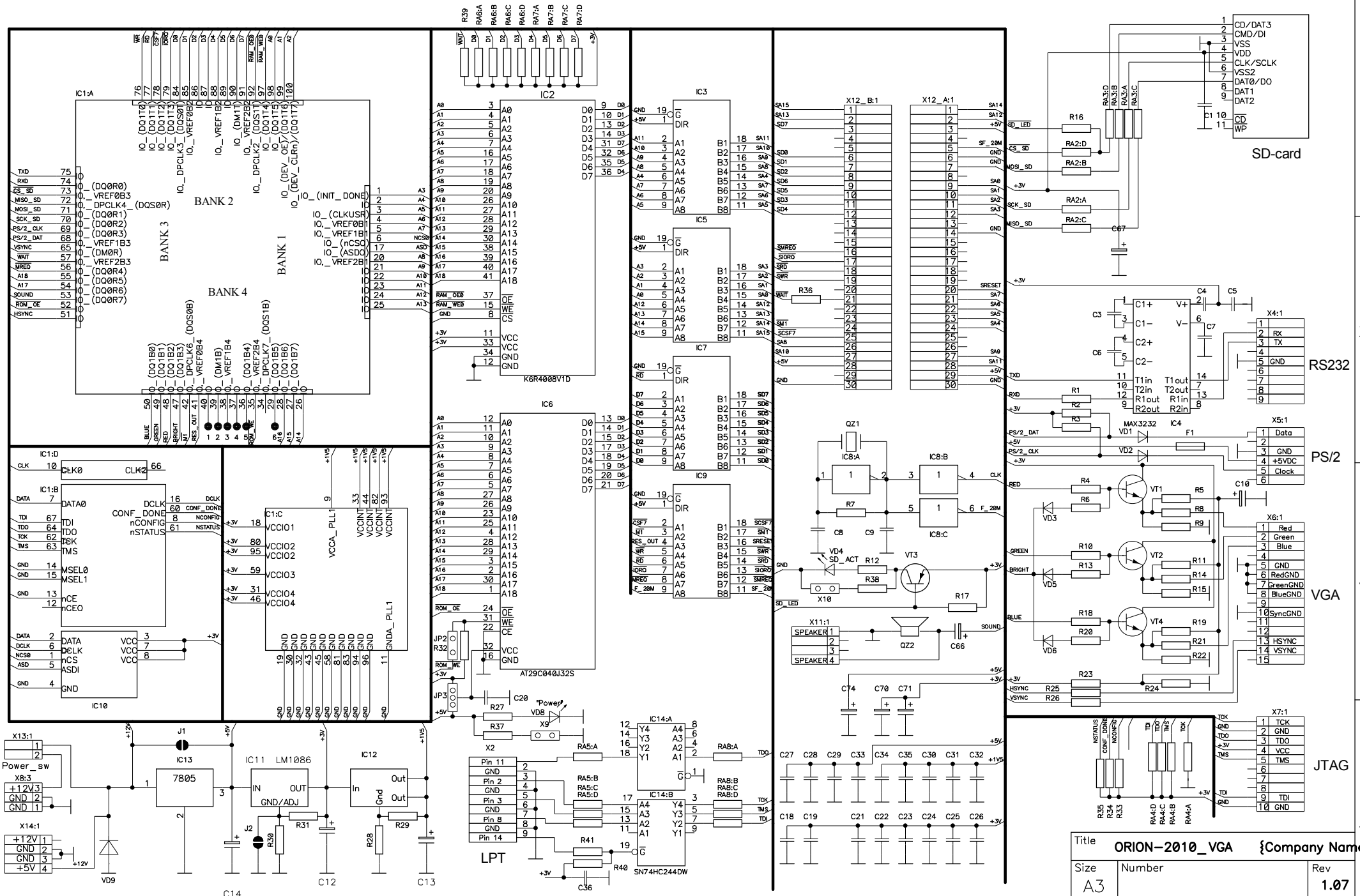

Create PDF files without this message by purchasing novaPDF printer (http://www.novapdf.com)